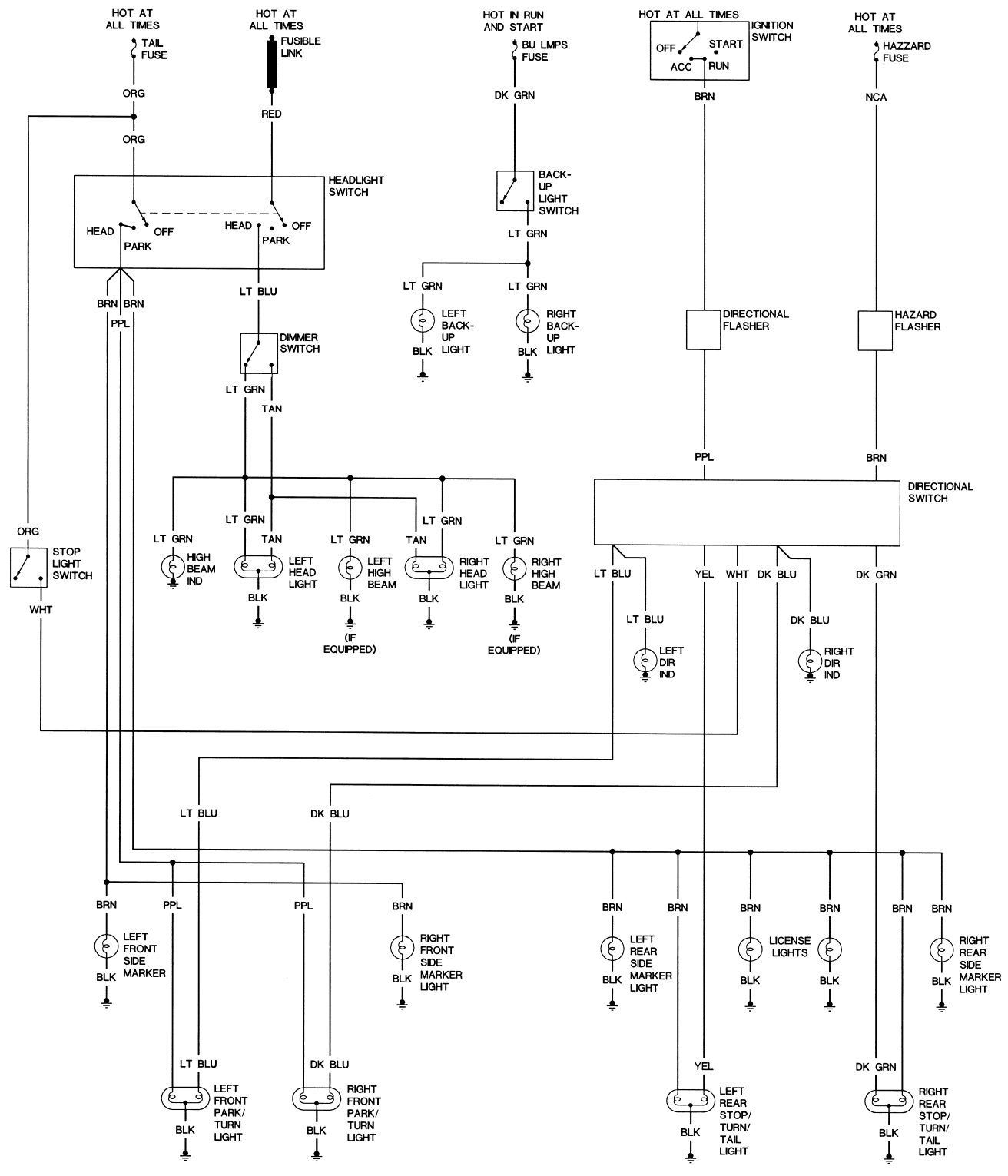
HOT AT ALL TIMES
TAIL FUSE
ORG
ORG
HOT AT ALL TIMES
FUSIBLE LINK
RED
HOT IN RUN AND START
BU LMPS FUSE
DK GRN
HOT AT ALL TIMES
IGNITION SWITCH
OFF
START
ACC
RUN
BRN
HOT AT ALL TIMES
HAZZARD FUSE
NCA
HEADLIGHT SWITCH
HEAD
OFF
PARK
HEAD
OFF
PARK
BRN
BRN
PPL
LT BLU
DIMMER SWITCH
LT GRN
TAN
BACK-UP LIGHT SWITCH
LT GRN
LT GRN
LEFT BACK-UP LIGHT
BLK
LT GRN
RIGHT BACK-UP LIGHT
BLK
DIRECTIONAL FLASHER
HAZARD FLASHER
PPL
BRN
DIRECTIONAL SWITCH
ORG
STOP LIGHT SWITCH
WHT
LT GRN
HIGH BEAM IND
LT GRN
TAN
LEFT HEAD LIGHT
BLK
LT GRN
LEFT HIGH BEAM
BLK
(IF EQUIPPED)
LT GRN
TAN
RIGHT HEAD LIGHT
BLK
LT GRN
RIGHT HIGH BEAM
BLK
(IF EQUIPPED)
LT BLU
YEL
WHT
DK BLU
DK GRN
LT BLU
LEFT DIR IND
DK BLU
RIGHT DIR IND
LT BLU
DK BLU
BRN
LEFT FRONT SIDE MARKER
BLK
PPL
PPL
BRN
RIGHT FRONT SIDE MARKER LIGHT
BLK
BRN
LEFT REAR SIDE MARKER LIGHT
BLK
BRN
BRN
LICENSE LIGHTS
BLK
BRN
BLK
BRN
BRN
RIGHT REAR SIDE MARKER LIGHT
BLK
LT BLU
LEFT FRONT PARK/ TURN LIGHT
BLK
DK BLU
RIGHT FRONT PARK/ TURN LIGHT
BLK
YEL
LEFT REAR STOP/ TURN/ TAIL LIGHT
BLK
DK GRN
RIGHT REAR STOP/ TURN/ TAIL LIGHT
BLK